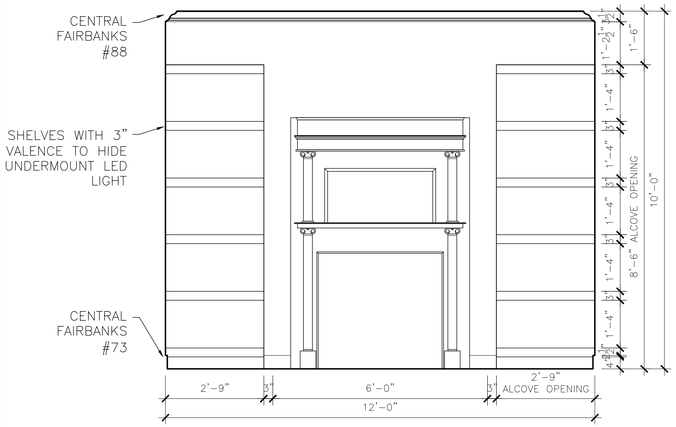

1 / 201 DINING ROOM MANTLE ELEVATION
SCALE: 1/2" = 1'-0"

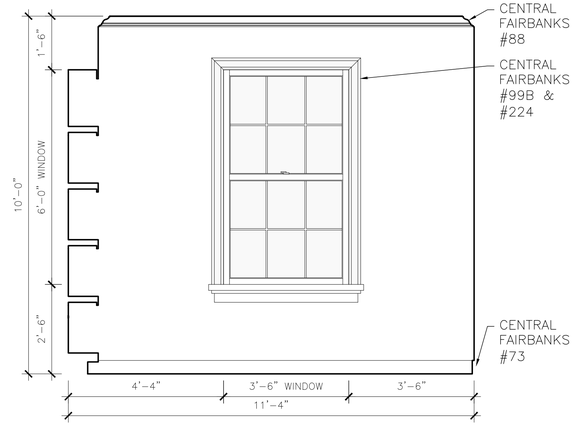

2 / 201 DINING ROOM WINDOW ELEVATION
SCALE: 1/2" = 1'-0"

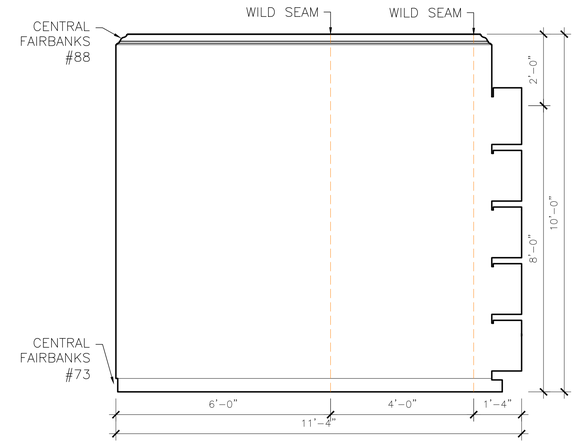

3 / 201 DINING ROOM ELEVATION
SCALE: 1/2" = 1'-0"

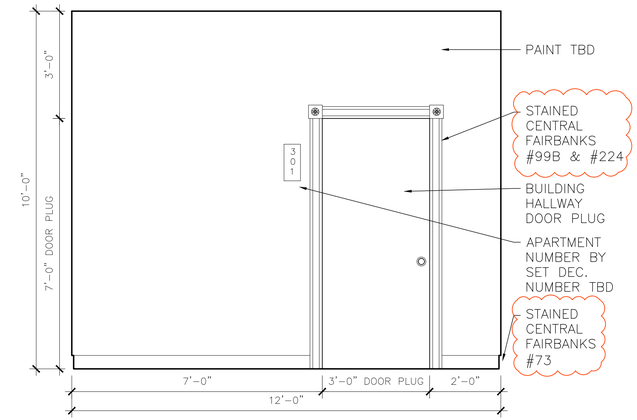

4 / 201 NEIGHBOUR'S DOOR ELEVATION
SCALE: 1/2" = 1'-0"

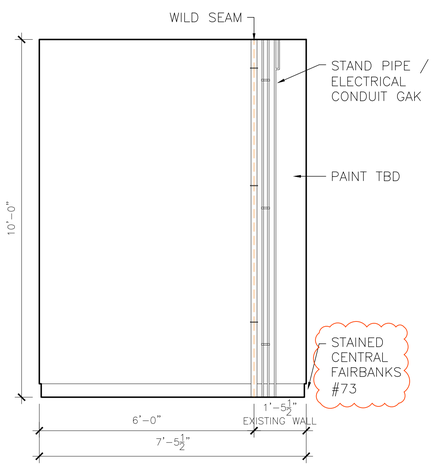

5 / 201 BUILDING HALLWAY ELEVATION
SCALE: 1/2" = 1'-0"

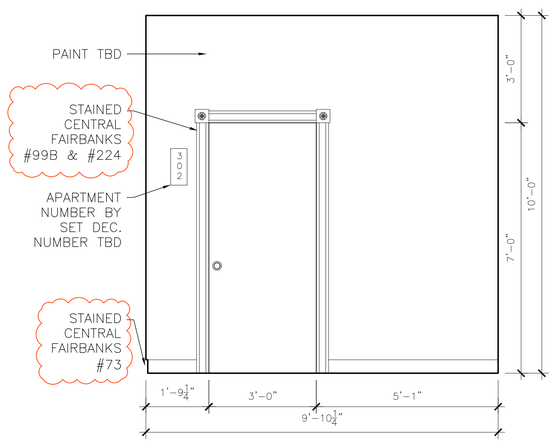

6 / 201 BUILDING HALLWAY ELEVATION
SCALE: 1/2" = 1'-0"

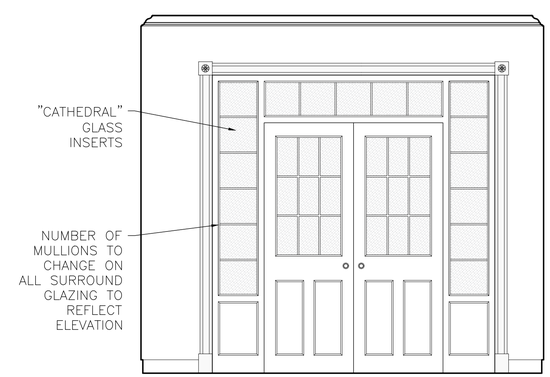

7 / 201 LIVING ROOM DOOR ELEVATION
SCALE: 1/2" = 1'-0"

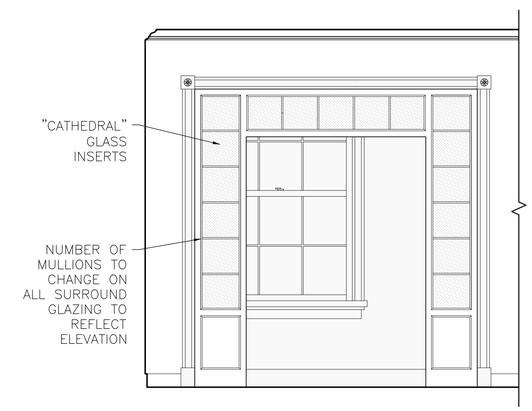

8 / 201 LIVING ROOM TO DEN ELEVATION
SCALE: 1/2" = 1'-0"

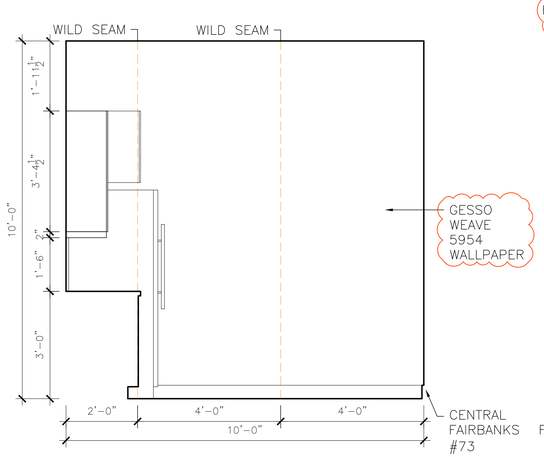

9 / 201 KITCHEN ELEVATION
SCALE: 1/2" = 1'-0"

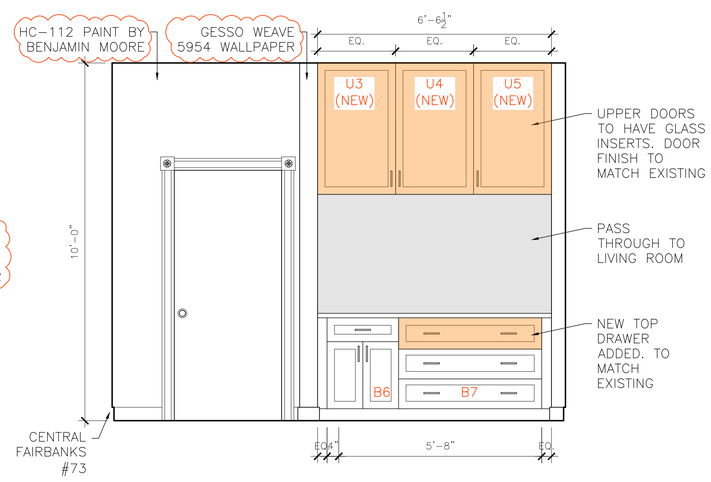

10 / 201 KITCHEN DOOR ELEVATION
SCALE: 1/2" = 1'-0"

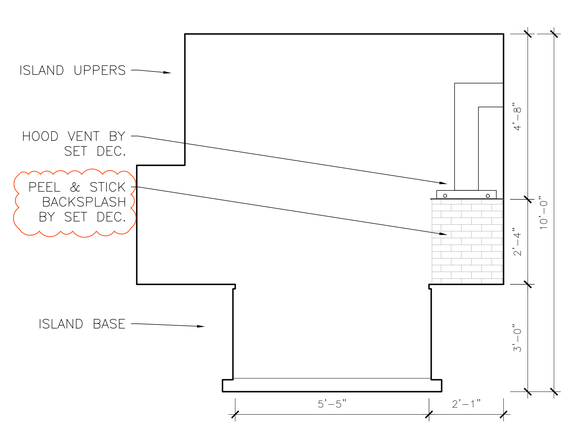

11 / 201 KITCHEN ELEVATION
SCALE: 1/2" = 1'-0"

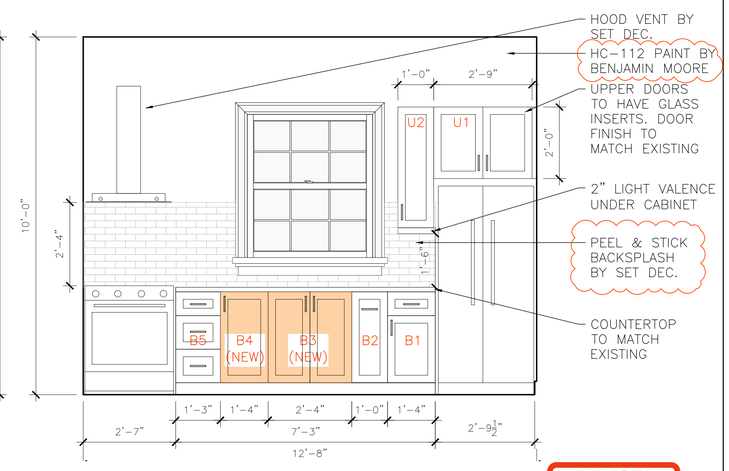

12 / 201 KITCHEN WINDOW ELEVATION
SCALE: 1/2" = 1'-0"

REVISED
OCT 20/22

ORPHAN BLACK: *ECHOES*	ORPHAN BLACK SPINOFF PRODUCTIONS LTD. 2480 STANFIELD RD. MISSISSAUGA, ON, L9Y1S2 T: 647.689.8010	Production Designer: AIDAN LERIOUX	Set name: INT. KIRA & ELEANOR'S APARTMENT	Date: OCT 04, 2022	Scale: AS NOTED	Revised: OCT 20, 2022	Revision no.: 03	Set no.: S002
		Art Director: ALDER DUNLAP	Location address: STUDIO	Drawn by: E.S.	Sheet name: ELEVATIONS			Sheet no.: 201